Medical Xpress

Engineering B cells to express pathogen-specific antibodies to protect against infection

May 24 2019, by Thamarasee Jeewandara

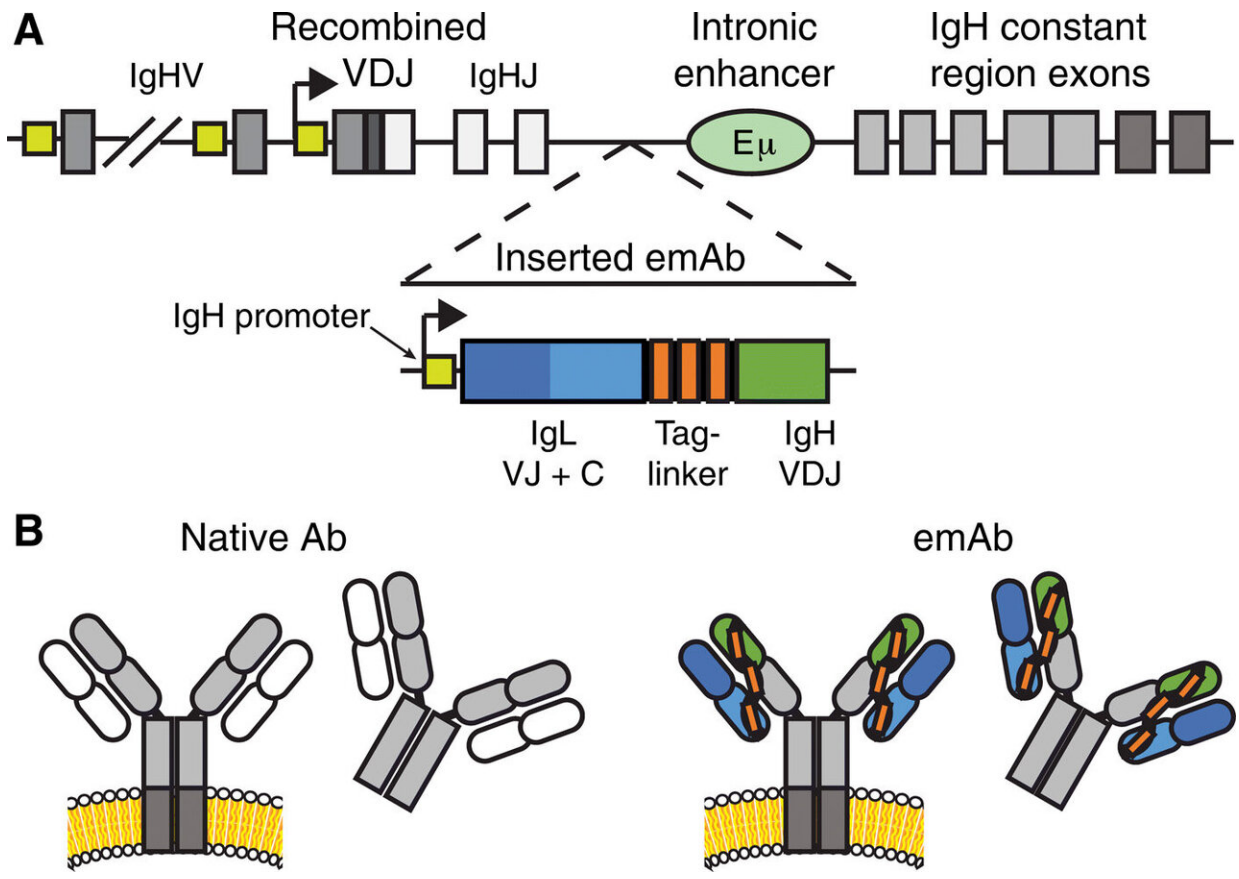

CRISPR-Cas9–mediated replacement of an endogenous antibody with an emAb. (A) Diagram showing insertion of an emAb cassette containing an IgH promoter, a full light chain, a linker, and an IgH VDJ into the intronic region between the terminal J segment and the Eμ enhancer, upstream of the endogenous IgH constant region exons. (B) Schematic showing normal transmembrane and secreted antibody versus transmembrane and secreted emAb with the

endogenous IgH constant regions shown in gray. Ab, antibody. Credit: *Science Immunology*, doi: 10.1126/sciimmunol.aax0644

Antibodies are currently in use to treat diseases that range from cancer to autoimmunity and are usually administered to patients in multiple doses, much like medical drugs. However, the production and storage of antibodies are comparatively more expensive, with considerable interest on finding alternative strategies to deliver them.

In a recent study, Howell F. Moffett and an interdisciplinary research team in the departments of Global Health, Immunology, Vaccine and Infectious Disease in the U.S. engineered both human and murine (mouse) B cells in the lab. They engineered the cells to express antibodies that targeted a number of viruses including the respiratory syncytial virus (RSV). The scientists showed that a single injection of B cell expressing RSV-specific antibodies into mice lacking T and B cells to be protective. This new technology, now published in *Science Immunology,* will open the possibility of using engineered B cells as therapeutics in healthcare.

Effective vaccines are not currently available for lifelong protection against many common infections such as RSV, HIV, influenza virus and Epstein-Barr virus (EBV), despite decades of research. In the present work, Moffett et al. introduced an alternative to a protective vaccine by developing a genetic strategy using CRISPR-Cas9 (clustered regularly interspaced short palindromic repeats and Cas9 protein), using the technique to replace endogenously encoded antibodies of primary human B cells with antibodies that target RSV, HIV, influenza or EBV instead.

They observed the efficient expression of the engineered antibodies in primary B cells under the control of endogenous regulatory elements to

indicate intracellular compatibility. The cells also maintained normal antibody expression and secretion. Using the engineered mouse B cells, they showed how a single transfer of B cells engineered to express an antibody against the respiratory disease RSV resulted in potent and durable protection in *RAG1* deficient mice. The present approach offers the opportunity to achieve sterilizing immunity against pathogens where traditional vaccines have thus far failed to induce or maintain protective antibody responses.

Protective vaccines have reduced human mortality from several infectious diseases by activating the humoral immune response for the subsequent production of high-affinity, pathogen-specific antibodies that produce B cells. Nevertheless, research efforts are still underway to offer protection against pathogens that cause a variety of common diseases, including the RSV, a common pathogen infecting the upper and lower respiratory tracts. The virus has a life-threatening impact on infants, the elderly, those with cardiopulmonary disease and those undergoing hematopoietic stem cell transplants.

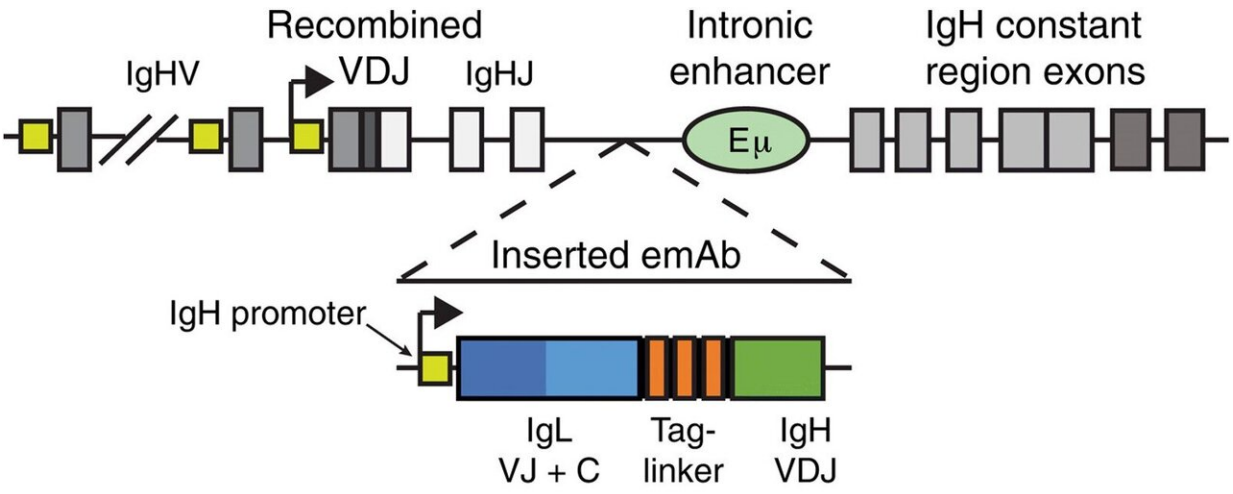

Diagram showing insertion of an emAb cassette containing an IgH promoter, a full light chain, a linker, and an IgH VDJ into the intronic region between the

terminal J segment and the Eμ enhancer, upstream of the endogenous IgH constant region exons. Credit: *Science Immunology*, doi: 10.1126/sciimmunol.aax0644

Although several variants of RSV vaccine candidates were developed in 1966 and 2016, they were not able to elicit a prolonged protective response. Scientists are also currently developing monoclonal antibodies to similarly protect against HIV, influenza virus, Epstein-Barr virus (HBV), human metapneumovirus virus (HMPV), dengue, Zika virus, Ebola virus and many other high-risk pathogens. Protective vaccines typically elicit both long-lived B cells and antibody-secreting plasma cells, where memory B cells express a membrane-bound form of antibody. These allow cells to rapidly respond and differentiate into additional antibody-secreting cells during infection.

Moffett et al. developed a genetic engineering strategy to mimic the effective B cell response, which allowed the expression of protective antibodies against RSV, HIV, influenza or EBV in mouse or human B cells in the presence of endogenous regulatory elements. The fully functional B cells typically require alternative splicing and polyadenylation to produce membrane-bound and secreted antibodies; a challenging process to recapitulate in a viral transgene. Adding another layer of complexity, antibodies are typically produced with two genes; the heavy chain gene (IgH; Immunoglobin heavy chain locus) and either the kappa (Igk) or the lambda (Igλ) light chain gene. Targeting the IgH locus is a complicated task due to its large size and extreme genetic heterogeneity within antibody expressing B cells.

The IgH locus includes segments of V (variable), D (diversity), J (joining) and C (constant) that undergo recombination events at the level of the DNA during B cell development in each cell. Previous research

attempts had either replaced the heavy region or light region of the IgH locus to genetically engineer B cells. In the present work, Moffett et al. combined the two previous techniques by developing a single-cut approach to insert a genetic construct in an intronic region (noncoding region of an RNA transcript) of the IgH locus. Using this approach, they efficiently engineered both murine and human cells.

To achieve one-hit insertion, the scientists designed an engineered monoclonal antibody (emAb) cassette containing an IgH promoter. In the following step, Moffett et al. genetically engineered the constructs to allow emAbs to be expressed within membrane-bound regions, under the control of endogenous regulatory elements.

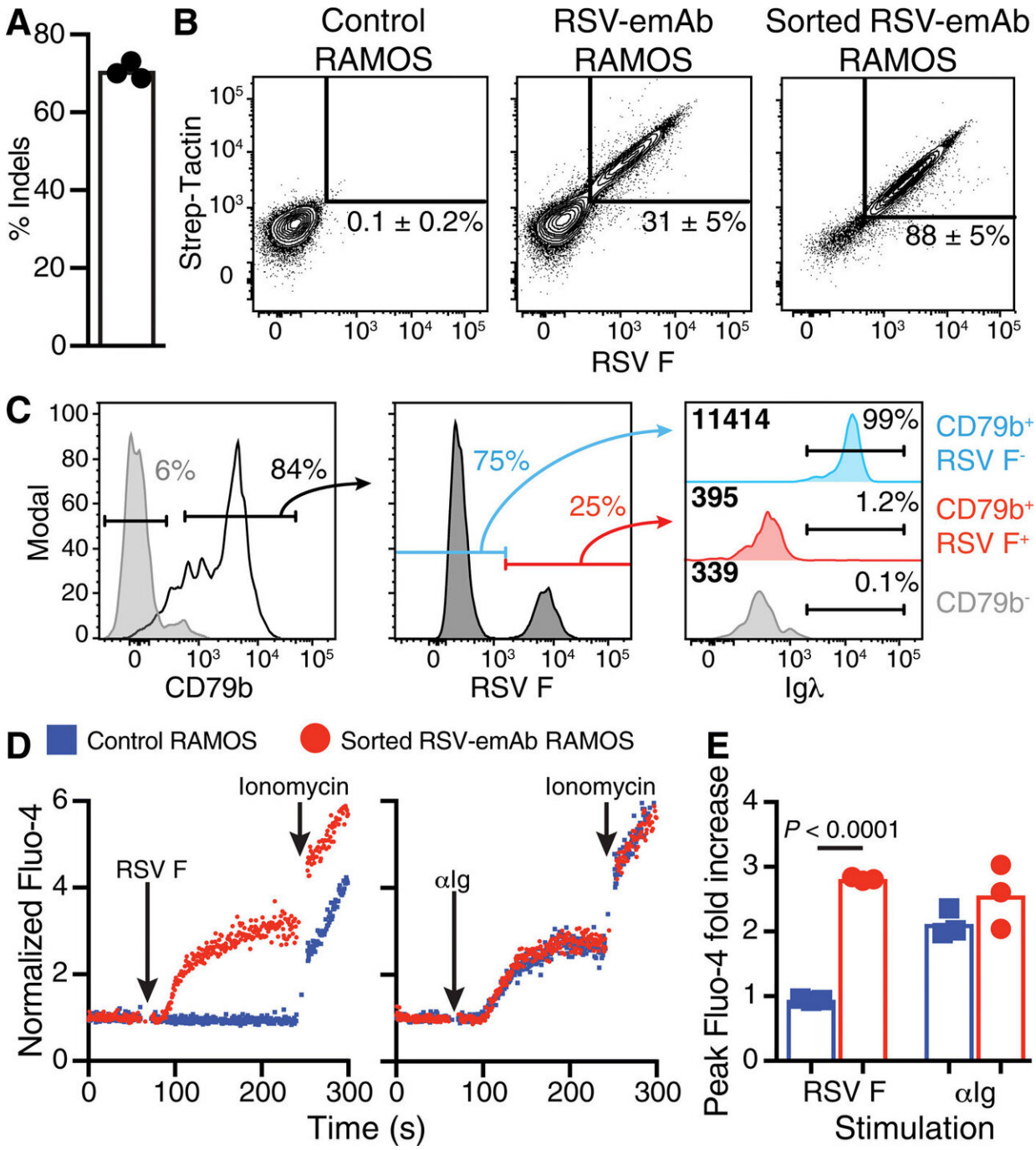

CRISPR-Cas9–mediated replacement of an endogenous antibody with an emAb targeting RSV in RAMOS B cells. (A) The frequency of indels in IgH sequences in independent experiments (n = 3) analyzed by decomposition 2 to 4 days after electroporation of huIgH296 gRNA/Cas9. (B) Representative flow cytometric analysis of RSV F antigen and Strep-Tactin binding by control and engineered RAMOS cells 2 days after electroporation with huIgH296 gRNA/Cas9 followed

by incubation with an RSV-emAb encoding AAV. Cell binding before (middle) and after FACS-purification and expansion (right) is displayed. The numbers on the plots represent the means ± SD% of RAMOS cells binding both RSV F antigen and Strep-Tactin from three independent experiments and two separate assessments of sorted RSV-emAb RAMOS cells. (C) Representative flow cytometric analysis of two similar experiments examining the loss of Igλ expression by CD79b+ RSV F+ RAMOS B cells compared with CD79b+ RSV F− and CD79b− cells in the same culture. (D) Representative flow cytometric analysis and (E) peak fold increase in Fluo-4 fluorescence in RSV-emAb+ RAMOS cells and control RAMOS cells after stimulation with αIg F(ab′)2 (1 μg/ml) or tetramerized RSV F antigen (1 μg/ml). Data points are combined from three independent experiments, and the P value was determined using an unpaired two-tailed t test with Welch's correction. Credit: *Science Immunology*, doi: 10.1126/sciimmunol.aax0644

To test the insertion and expression of emAb (engineered monoclonal antibody) cassettes, the scientists investigated them in a Burkitt-lymphoma derived B cell line that natively expressed membrane-bound antibodies. They analyzed the genome using the CrispRGold algorithm to identify several potential Cas9 guide RNA binding sites to implement the intended genetic engineering. The scientists first electroporated the cell line precomplexed with the Cas9 protein to achieve efficient DNA cutting. Then they incubated the cells with adeno-associated virus (AAV), which encoded an engineered RSV-emAb cassette derived from Palivizumab (a monoclonal antibody engineered for respiratory syncytial virus).

The scientists designed the experiments to only allow cells to bind the respiratory syncytial virus (RSV) antigen, if the RSV-emAb cassette could be successfully inserted into the IgH locus. Using flow cytometry, they then assessed RSV-emAb expression in the cell surface and the results showed that emAb engineering reprogramed the B cells with a

functional monoclonal antibody.

In the next step, Moffett et al. engineered human primary B cells with cell expansion and differentiation, before electroporation with gRNA/Cas9. To test the performance of the emAb backbone across multiple, independently derived antibodies, the scientists designed three additional emAb cassettes encoding the listed antibodies, alongside mock engineered control B cells.

1. HIV-1 broadly neutralizing antibody VRC01
2. The influenza broadly neutralizing antibody MEDI8852, and
3. The EBV neutralizing antibody AMM01

The scientists showed the flexible nature of the emAb platform to engineer B cells to produce and secrete protective monoclonal antibodies. Followed by experimental setup optimization to express both IgH loci via gene engineering.

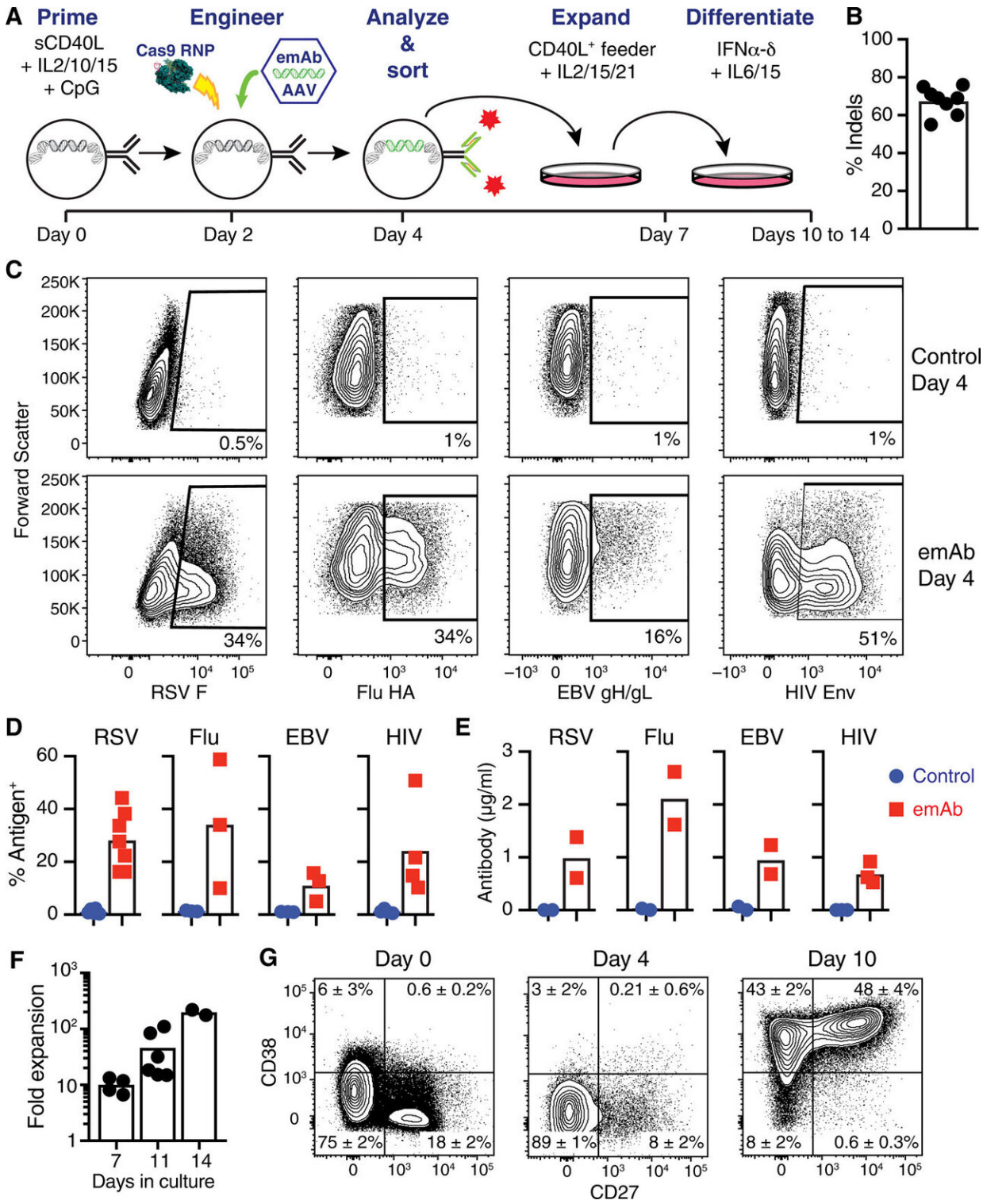

CRISPR-Cas9–mediated replacement of endogenous antibodies with engineered emAbs targeting RSV, HIV-1, influenza, or EBV in primary human B cells. (A) Schematic representation of the human B cell engineering protocol. (B)

Frequency of indels detected in IgH sequences from B cells 2 days after electroporation with huIgH296 gRNA/Cas9 (n = 8 individuals). (C) Representative flow cytometric analysis and (D) quantitation of antigen binding to human B cells from different individuals (n = 3 to 7) engineered to express emAbs based on the HIV-1 broadly neutralizing antibody VRC01 (HIV-emAb), the influenza broadly neutralizing antibody MEDI8852 (Flu-emAb), the EBV neutralizing antibody AMM01 (EBV-emAb), or RSV-emAb. Cells were analyzed at day 4 shown in (A) and compared with control B cells that were mock-electroporated and cultured similarly. (E) ELISA-mediated quantitation of antigen-specific antibodies in day 10 supernatants from two to three independent B cell cultures per specificity. (F) Combined data from two experiments displaying the number of emAb B cells in cultures at days 7, 11, and 14 displayed as a fold expansion over the number of cells sorted at day 4 (n = 2 to 6). (G) Representative flow cytometric analysis of CD38 and CD27 expression by B cells at the start of culture and days 4 and 10. The mean ± SD% in each quadrant was generated from three individuals. Data are representative of three similar experiments. Credit: *Science Immunology*, doi: 10.1126/sciimmunol.aax0644

After completing the experiments to engineer primary B cells in vitro, the scientists next tested their protective capacity in vivo in a mouse model of infection. Moffett et al. were able to maintain serum antibody levels for 40 days, after transferring the gene engineered emAb B cells into the immunocompromised RAG1$^{-/-}$ mutant mouse model lacking endogenous T and B cells. The engineered cells protected the mice for 82 days due to the persistence of emAb cells. However, the cells did not respond to infection, which the scientists credited to the absence of T cells in the RAG$^{-/-}$ mutant mice.

Since the B cells were engineered and cultured in-lab, they may not have acquired the property of memory B cell formation to respond independently of the help of T cells and prevent infection in the animal model. In the future, therefore, Moffett et al. intend to pre-select B cell

subsets with reduced dependence on T cells to improve the cell response to infection.

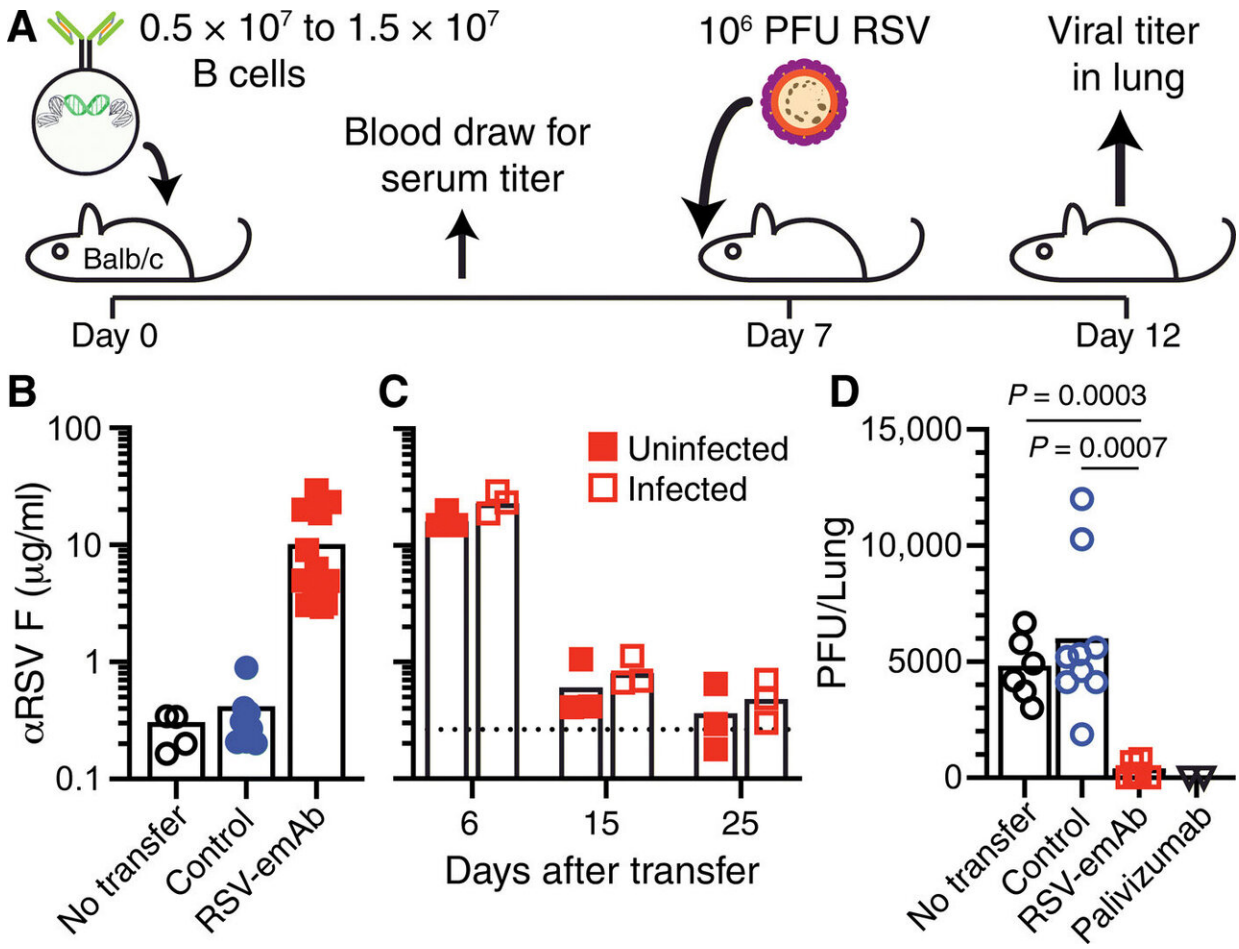

Immunocompetent mice are protected from RSV infection by RSV-emAb B cells. (A) Schematic representation of experiment to test acute antiviral protection by RSV-emAb B cells 7 days after transfer into Balb/cByJ recipient mice. (B) RSV F antigen–specific antibodies in serum by ELISA from individual mice that did not receive transfer or from mice 6 days after the transfer of control B cells or RSV-emAb B cells (n = 4 to 9). Data are combined from six independent experiments. (C) RSV F antigen–specific antibodies in serum from individual mice 6, 15, and 25 days after the transfer of RSV-emAb B cells with or without infection with 106 PFU of RSV at day 7 (n = 3). The dashed line represents the mean level of RSV F antigen–specific antibodies in uninfected

control mice that did not receive cells. Data are combined from two independent experiments. (D) RSV PFU in the lungs of mice who received no B cell transfer, control B cells, RSV-emAb B cells, or palivizumab (15 mg/kg) followed by intranasal infection with 106 PFU of RSV (n = 2 to 9). The P values were determined using an unpaired two-tailed t test with Welch's correction. Credit: *Science Immunology*, doi: 10.1126/sciimmunol.aax0644

The translational experiments done in the immunodeficient animal models represented the disease mechanisms observed with immunocompromised hematopoietic stem cell recipients, who are vulnerable to infection after transplant. Moffett et al. envision engineering emAb cells for infusion to target RSV, EBV, HMPV (Human Metapneumovirus) and CMV (Cytomegalovirus) and alleviate/circumvent mechanisms of disease. In parallel, scientists are also working toward bypassing patient-specific in vitro cell preparation to offer adoptive cell therapies using universal donor cell production and nanocarrier driven transport of primary cells in vivo to allow for efficient antibody delivery.

In this way, Moffett et al. showed specific and efficient primary mouse and human B cell engineering to produce multiple, potent antiviral bodies. The modified IgH loci in these engineered B cells retained the ability to undergo alternate splicing and generate both cell surface B cell receptors and secrete antibodies at protective levels after transfer in an animal model. The technique will offer the possibility to engineer humoral immunity to produce sterilizing immunity in the future to diseases for which long-term therapies or cures do not yet exist.

More information: Howell F. Moffett et al. B cells engineered to express pathogen-specific antibodies protect against infection, *Science Immunology* (2019). DOI: 10.1126/sciimmunol.aax0644

Laura M. Walker et al. Passive immunotherapy of viral infections: 'super-antibodies' enter the fray, *Nature Reviews Immunology* (2018). DOI: 10.1038/nri.2017.148

Kunwoo Lee et al. Nanoparticle delivery of Cas9 ribonucleoprotein and donor DNA in vivo induces homology-directed DNA repair, *Nature Biomedical Engineering* (2017). DOI: 10.1038/s41551-017-0137-2

Michel Sadelain et al. Therapeutic T cell engineering, *Nature* (2017). DOI: 10.1038/nature22395