Medical Xpress

New findings on tuberculosis could change how we treat inflammatory disorders

August 28 2024, by Katherine Fenz

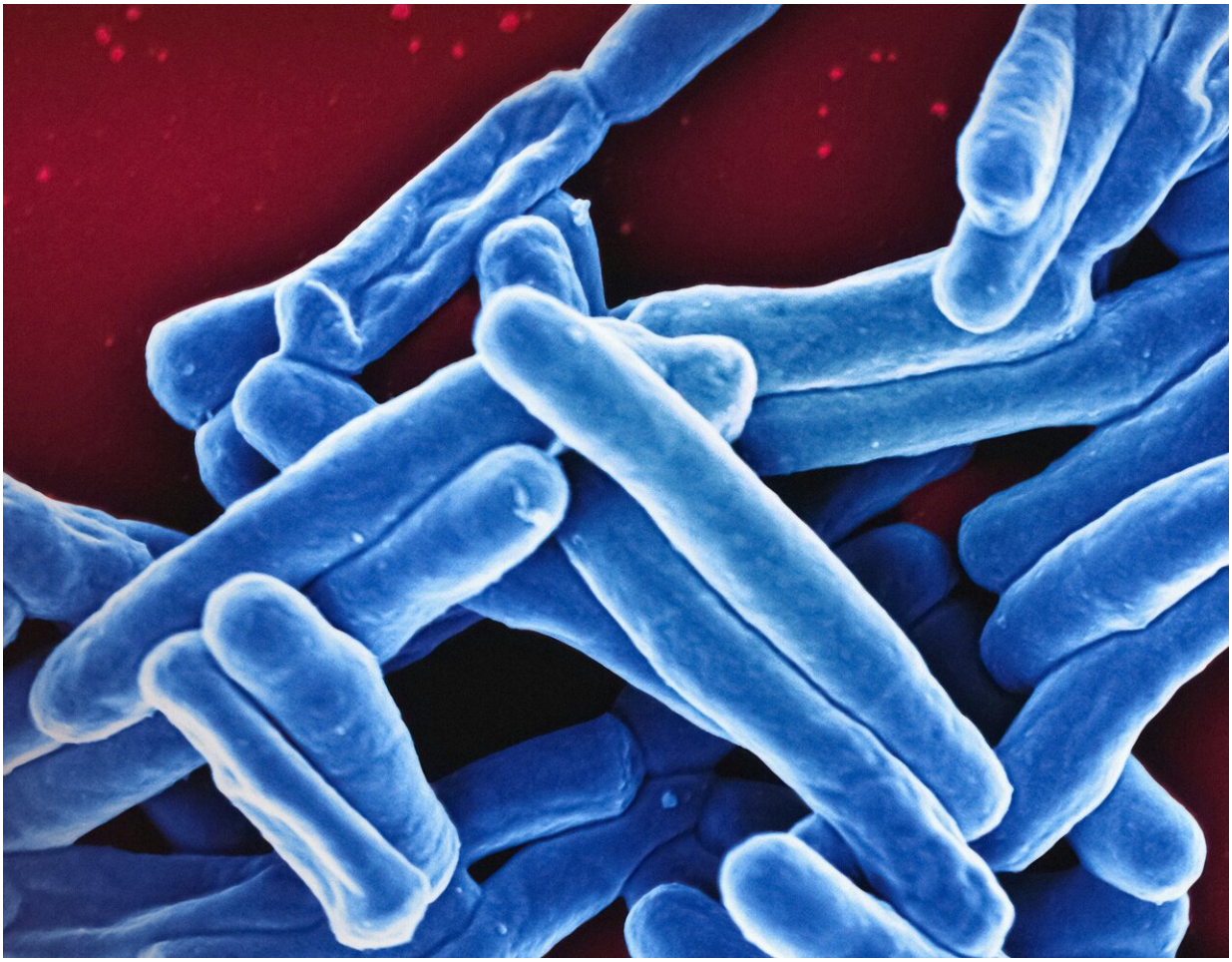

Credit: Unsplash/CC0 Public Domain

Tuberculosis (TB) is a confounding scourge. It's the leading cause of

death from infectious disease in the world, and yet it's estimated that those deaths represent perhaps 5% of infections with Mycobacterium tuberculosis (Mtb). Antibiotics can take credit for saving the lives of some of those with Mtb, but a chasm nevertheless persists between the prevalence of infection and the targeted severity of its impact. A growing body of evidence suggests genetic vulnerabilities to TB account for that gap.

Now researchers from The Rockefeller University have found another rare mutation that leaves its carriers much more likely to become ill with TB—but, curiously, not with other infectious diseases. This finding, recently published in *Nature*, may upend long held assumptions about the immune system.

It's long been known that an acquired deficiency of a pro-inflammatory cytokine called TNF is linked to an increased risk of developing TB. The current study, led by Rockefeller's Stéphanie Boisson-Dupuis and Jean-Laurent Casanova, revealed a genetic cause of TNF deficiency, as well as the underlying mechanism: a lack of TNF incapacitates a specific immune process in the lungs, leading to severe—but surprisingly targeted—illness.

The findings suggest that TNF, long considered a key galvanizer of the immune response, might actually play a much narrower role—a discovery with far-reaching clinical implications.

"The past 40 years of scientific literature have attributed a wide variety of pro-inflammatory functions to TNF," says Casanova, head of the St. Giles Laboratory of Human Genetics of Infectious Diseases. "But beyond protecting the lungs against TB, it may have a limited role in inflammation and immunity."

Rare risk

Casanova's lab has been studying the genetic causes of TB for more than two decades through field work in several countries and a wide network of collaborating physicians across the world. They maintain an ever-growing database of whole-exome sequences from a global pool of patients—more than 25,000 people to date. Of those, some 2,000 have had TB.

Over the years they've identified several rare genetic mutations that render some people vulnerable to TB. For example, mutations in a gene called CYBB can disable an immune mechanism called the respiratory burst, which produces chemicals called reactive oxygen species (ROS). Despite its pulmonary-sounding name, the respiratory burst takes place in immune cells throughout the body.

ROS help pathogen-consuming white blood cells called phagocytes (from the Greek for "eating") to destroy the invaders they've devoured. If ROS aren't produced, those pathogens can thrive unchecked, leading to debilitating complications. As a result, carriers of this CYBB mutation become vulnerable to not just TB but to a wide variety of infectious diseases.

For the current study, the team suspected that a similar inborn error of immunity may lay behind the severe, recurring TB infections experienced by two people in Colombia—a 28-year-old woman and her 32-year-old cousin—who had been repeatedly hospitalized with significant lung conditions. In each cycle, they initially responded well to anti-TB antibiotics, but within a year, they were sick again.

Puzzlingly, however, their long-term health records showed that their immune systems functioned normally, and that they were otherwise healthy.

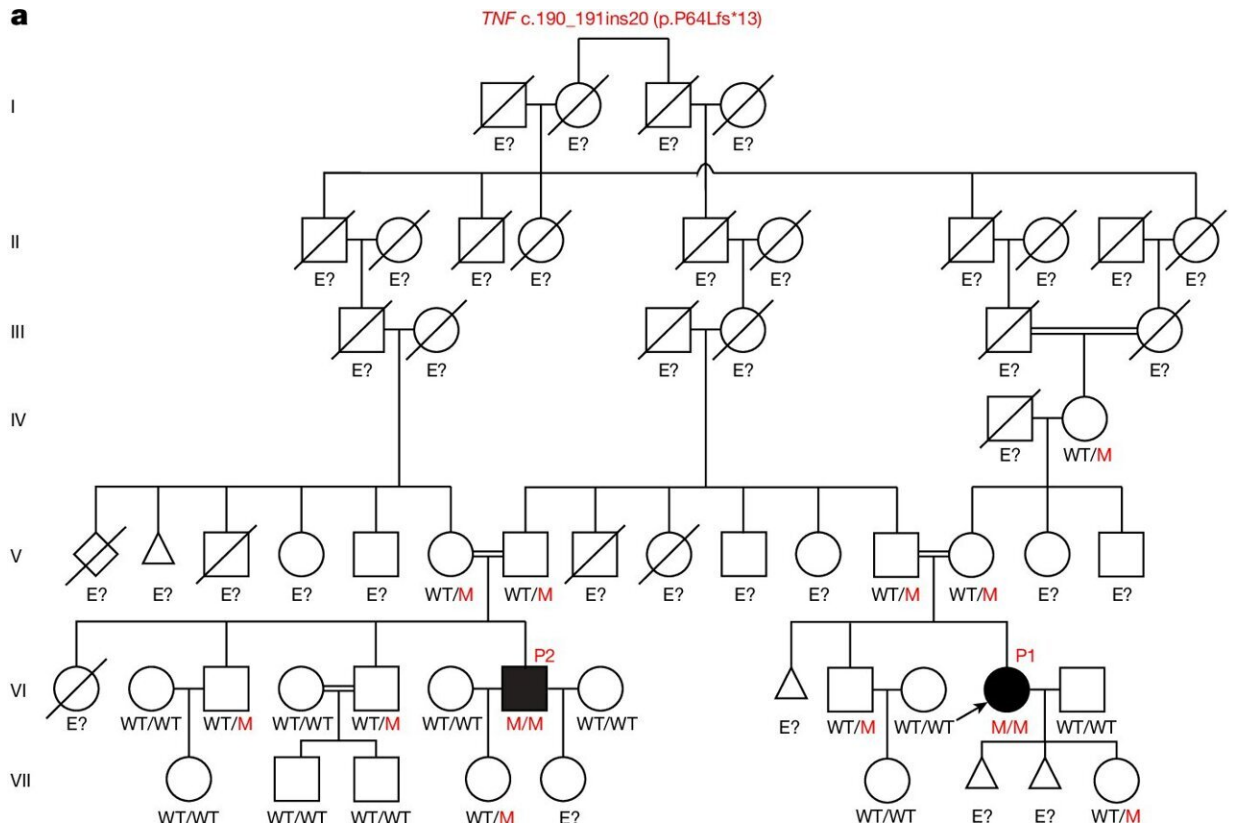

Identification of a biallelic TNF variant in two patients with pulmonary TB. Credit: *Nature* (2024). DOI: 10.1038/s41586-024-07866-3

A telling deficiency

To find out why they were particularly prone to getting TB, the researchers performed whole-exome sequencing on the two, as well as a genetic analysis of their respective parents and relatives.

The two were the only members of their extended family with a mutation in the TNF gene, which encodes for proteins linked to the regulation of a variety of biological processes. Short for "tumor necrosis factor," increased TNF production is also associated with a variety of conditions, including septic shock, cancer, rheumatoid arthritis, and

cachexia, which causes dangerous weight loss.

The protein is largely secreted by a type of phagocyte called a macrophage, which relies on the ROS molecules generated by the respiratory burst to finish off pathogens they've consumed.

In these two patients, the TNF gene failed to function, preventing the respiratory burst from occurring, and thus the creation of ROS molecules. As a result, the patients' alveolar macrophages, located in their lungs, were overrun with Mtb.

"We knew that the respiratory burst was important for protecting people against various types of mycobacteria, but now we know that TNF is actually regulating the process," says Boisson-Dupuis. "And when it's missing in alveolar macrophages, people will be susceptible to airborne TB."

She adds, "It's very surprising that the people we studied are adults who have never been sick with other infectious diseases, despite being repeatedly exposed to their microbes. They are apparently selectively at risk for TB."

Treatment potential

The discovery also solves a long-standing mystery about why TNF inhibitors, which are used to treat autoimmune and inflammatory diseases, raise the chances of contracting TB. Without TNF, a key part of the defense against it is defunct.

The findings may lead to a radical reassessment of TNF's role in immune function—and new treatment possibilities.

"TNF is required for immunity against Mtb, but it seems to be redundant

for immunity against many other pathogens," Casanova says. "So the question is, what other pro-inflammatory cytokines are doing the jobs we thought TNF was doing? If we can discover that, we may be able to block these cytokines rather than TNF to treat diseases where inflammation plays a role."

More information: Jean-Laurent Casanova, Tuberculosis in otherwise healthy adults with inherited TNF deficiency, *Nature* (2024). DOI: 10.1038/s41586-024-07866-3.
www.nature.com/articles/s41586-024-07866-3

Provided by Rockefeller University