Medical Xpress

New insight into how the brain makes decisions in changing environments

June 21 2021, by Ingrid Fadelli

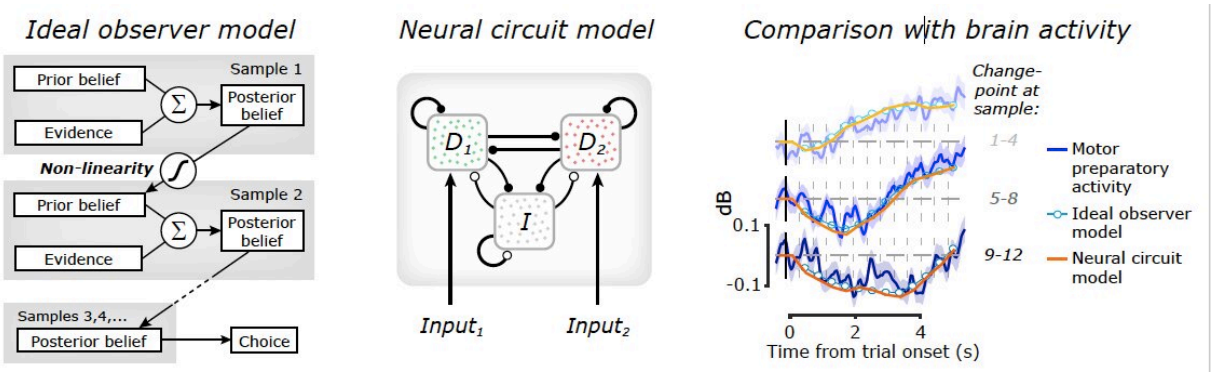

Schematic illustration of ideal observer model (left), neural circuit model (middle), and the comparison of their predictions with the measured brain activity of human participants (right). Credit: Murphy et al.

Over the past decades, psychologists and neuroscientists worldwide have been trying to gain a better understanding of how humans make simple decisions about the state of the world around them. To do this, they devised theoretical models describing how decisions should be made in different contexts and carried out experiments aimed at identifying brain circuits associated with decision-making.

Some studies have specifically focused on decision-making in situations where there is a high degree of uncertainty, for instance when humans are navigating changing environments. When environments change or

evolve over time, making decisions is believed to require a non-linear accumulation of evidence.

In other words, neuroscientists have hypothesized that in changing environments, humans must continuously gather evidence about the situation they are facing and then use this evidence to make informed decisions. So far, the neural underpinnings of this evidence accumulation process, however, have remained unknown.

Researchers at University Medical Center Hamburg-Eppendorf in Germany have recently carried out a study aimed at better understanding how the human brain accumulates evidence to make decisions in changing environments. Their paper, published in *Nature Neuroscience*, found links between normative decision-making computations and adaptive circuit dynamics across the human cortex.

"Much remains to be understood about how we make decisions, especially in complex and uncertain environments – including those in which, as in everyday life, the state of the world can change unpredictably," Peter Murphy, one of the researchers who carried out the study, told Medical Xpress. "Our goal was to understand how the brain forms decisions in such changing environments."

To understand how the human brain makes decisions in changing environments, Murphy and his colleagues examined human behavior and the activity of neurons in the cortex as a group of participants gathered visual evidence in a changing environment. To collect their data, they used a series of different techniques, models and approaches.

"We used a variety of complementary methods: an 'ideal observer' computational model to understand how we should make decisions in changing environments; a model of a cortical circuit to understand how the brain might implement this process; a non-invasive technique called

magnetoencephalography, applied to human participants performing a decision-making task to connect the models to measured brain activity; and measurement of pupil size to monitor changes in physiological arousal during task performance," Murphy explained.

The researchers found that as they were accumulating visual evidence from their surroundings, participants exhibited specific behaviors and heightened activity in cortical regions that are known to be involved in action planning. This suggests that these brain regions are ultimately associated with the adaptive accumulation of evidence required to make decisions in changing environments.

"We were able to demonstrate a new connection between the abstract algorithm for optimal decision-making in changing environments and the neurobiological model that can be plausibly realized in brain circuits," Murphy said. "We found that the predictions of both were strikingly similar to brain activity measured in parts of the brain that are usually associated with the preparation of motor actions."

Interestingly, Murphy and his colleagues also gathered evidence hinting at the involvement of additional brain mechanisms in decision-making when in changing environments. These additional brain mechanisms include a top-down feedback of activity to early sensory brain regions, which could help to consolidate emerging brain states associated with decisions; and strong arousal responses to environmental changes, which may facilitate switches in brain states.

Overall, the findings gathered by this team of researchers significantly broaden the current understanding of the neural underpinnings of decision-making in complex or shifting environments. In the future, they could inspire further studies examining the cortical regions they identified and their links to decision-making under varying degrees of uncertainty.

"One aspect of our future work on this topic will be to further unravel the neural mechanisms involved, with a particular focus on the role of different chemical messengers in the brain through pharmacological manipulation," Murphy said. "A second future direction is to use the current work as a foundation from which to understand how this process may be affected in psychological disorders that are often associated with altered decision-making–such as schizophrenia."

More information: Adaptive circuit dynamics across human cortex during evidence accumulation in changing environments. *Nature Neuroscience*(2021). DOI: 10.1038/s41593-021-00839-z

© 2021 Science X Network

Citation: New insight into how the brain makes decisions in changing environments (2021, June 21) retrieved 24 April 2024 from https://medicalxpress.com/news/2021-06-insight-brain-decisions-environments.html

This document is subject to copyright. Apart from any fair dealing for the purpose of private study or research, no part may be reproduced without the written permission. The content is provided for information purposes only.